**A** – Seat/Mating Ring
**B** – Face/Primary Ring
**C** – Retainer
**D** – Wear Indication
**E** – Cooled Gland
(Not Shown)

## Dry Running Agitator Seal
## (Type - SD900)

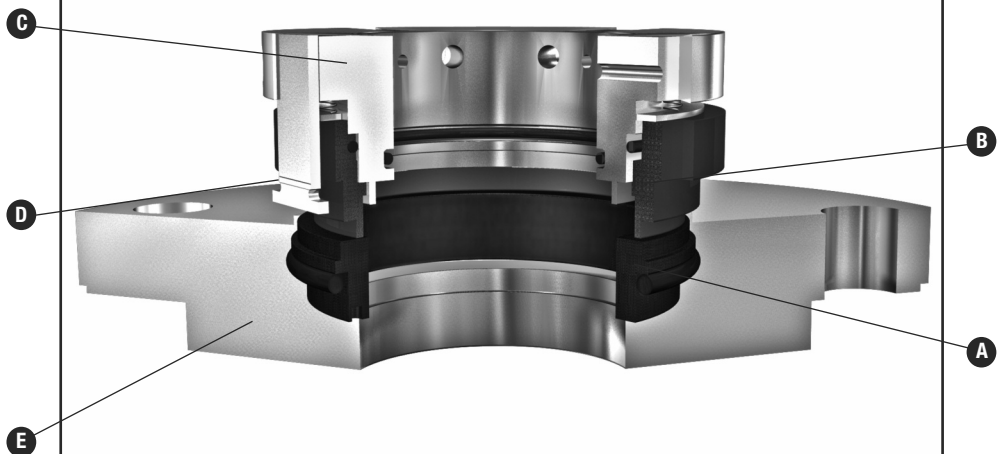

Gipfel
Engineering